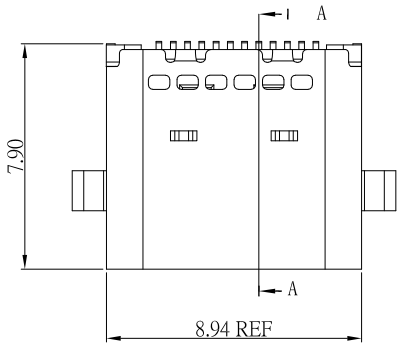

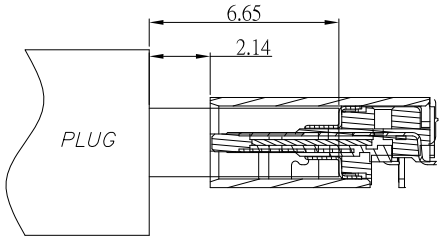

AFTER MATING

SBC-240M9-31x-S412

鍍層厚度 :

Blank : 1u"
2 : 15u"
3 : 30u"

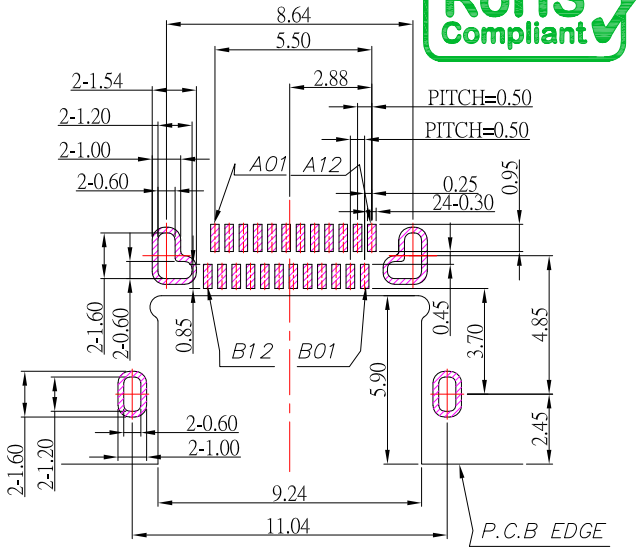

RECOMMENDED P.C.B. LAYOUT

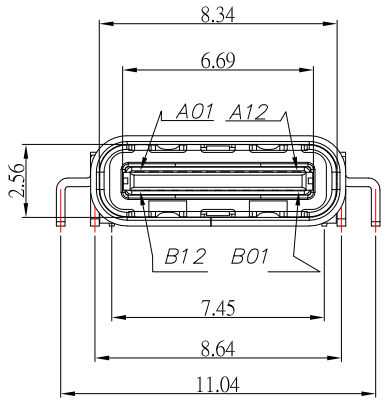

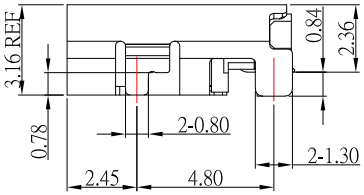

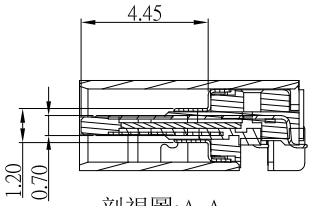

剖視圖:A-A

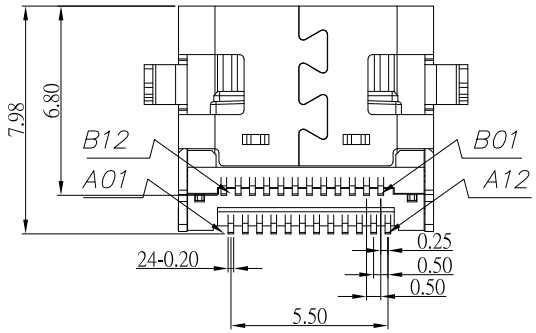

A1	GND	B12	GND
A2	TX1+	B11	RX1+
A3	TX1−	B10	RX1−
A4	VBUS	B9	VBUS
A5	CC1	B8	SBU2
A6	D+	B7	Dn2
A7	D−	B6	Dp2
A8	SBU1	B5	CC2
A9	VBUS	B4	VBUS
A10	RX2−	B3	TX2−
A11	RX2+	B2	TX2+
A12	GND	B1	GND
PIN	SIGNAL NAME	PIN	SIGNAL NAME

SPECIFICATIONS

Electrical:

1.Rating: 5.0V , 5.0 A

2.Dielectric Withstand Voltage: 100V AC

3.Contact Resistance: 40 mΩ Max

4.Insulation Resistance: 100 MΩ Min

Mechanical:

1.Connector Mate and Unmate Force

1.1 Mate force: 5~20 N

1.2 Unmate force: 8~20 N

Material:

1.Housing: LCP

2.Contact: C18400

3.Shell: SUS

Finish:

1.Contact: Plated Gold in Mating Area ;
Gold Plated on Solder Balls ;
Nickel under plated overall

2.Shell: Nickel under Plated surface layer

ITEM NO.	DESCRIPTION	DRAWN	DATE
4	新增2.36尺寸標示	Jack	010325
3	更新SIGNAL NAME	Jack	121324
2	更新圖面	Jack	110923
1	更新材質和SPEC	Jack	031423

CONTACT 建倚科技股份有限公司
CONTACT TECHNOLOGY CORP.

TOLERANCE UNLESS OTHERWISE STATED : Up to 5 ±0.2; Above 5 ~ 15 ±0.3; Above 15 ~ 30 ±0.4; Above 30 ~ 50 ±0.5; Angle ±0.3°

3RD. ANGEL'S | UNITS | MM

DRAWN BY: Jack Lu	DATE 01/03/25	MAT'L	
CHECKED BY: Jacky Chen	DATE 01/03/25	FINISH	
APPROVED BY: Tony Kao	DATE 01/03/25	SCALE 1 : 1	
		SHEET NO. 1 of 1	

TITLE	CONNECTOR
MODLE	USB 3.1 TYPE C 母座沉板, 板上 H2.36mm
DWG NO.	SBC-240M9-31x-S412
PART NO.	SBC-240M9-31x-S412
SIZE	A4
VER	R4